Uncontrolled Copy

GENERAL INFORMATION:

SHAFT RUNOUT:	.001 [.03] T.I.R. PER INCH LENGTH OF EXTENSION
END PLAY:	.010 TO .063 [.25 TO 1.60]
BEARINGS:	SLEEVE
MOUNTING POSITION:	ALL ANGLE

ELECTRICAL DATA:

OVERLOAD PROTECTOR:	AUTOMATIC RESET (SENSATA 7AM 304)
LEADS:	NO. 18 GA., .06 [1.5] THK. PVC 105°C INSUL.
LINE LEADS:	NO. 18 GA., .03[.8]THK. XLP 125°C INSUL.
GROUND LEAD:	NO. 18 GA., .03 [.8] THK. (GREEN/YELLOW) INSUL.

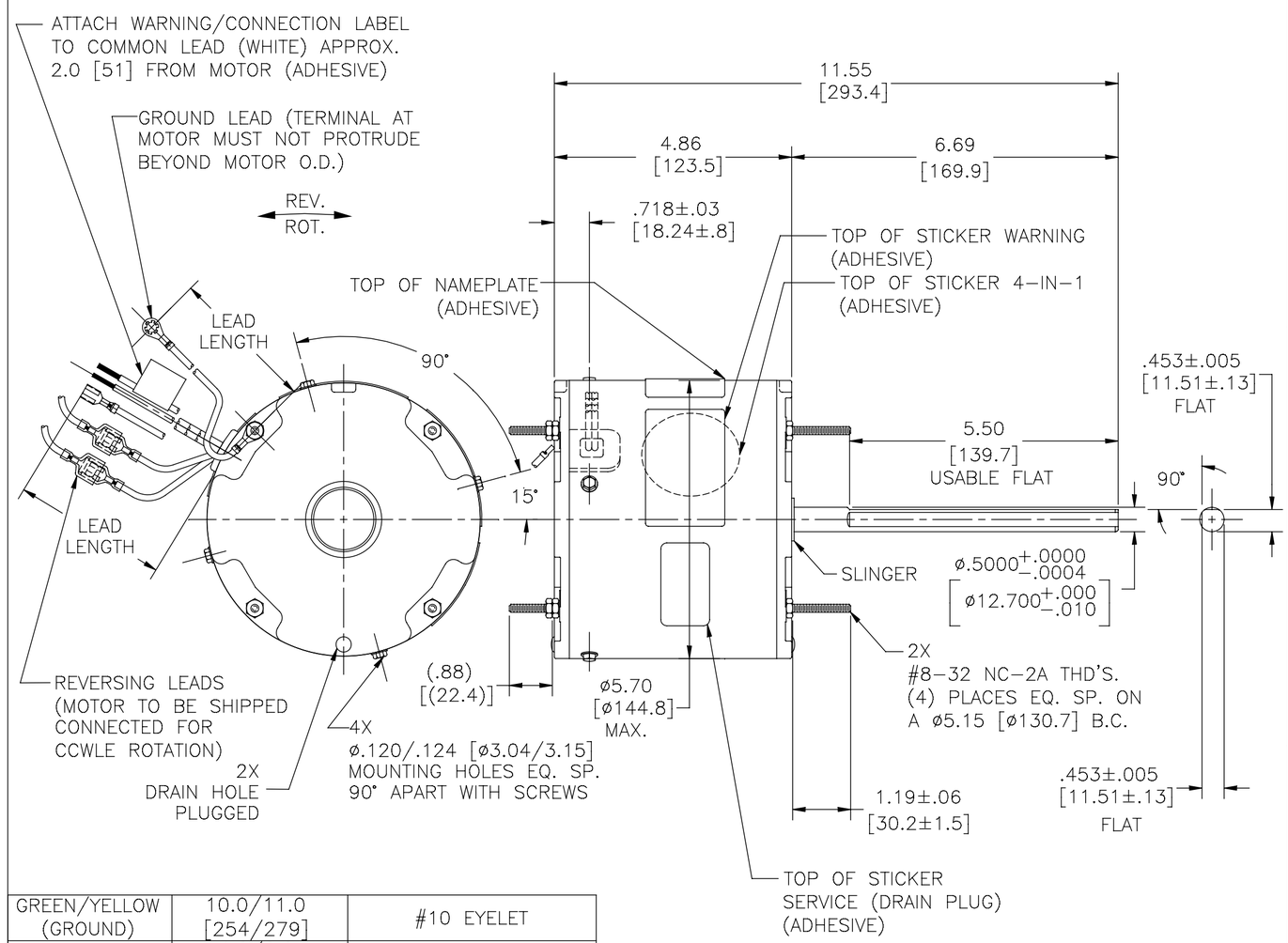

NAMEPLATE DATA:	EXTERNAL CONNECTION DIAGRAM
MODEL NO.: F48W11A01 CUST. P/N: ORM5488 HP: 1/3–1/8 ROT.: REVERSIBLE RPM: 825 TYPE: UF FRAME: 48 VOLTS: 208–230 PH: 1 AMPS: 2.1 HZ: 60 INS.: B AMB.: 60° C DUTY: AIR OVER CAP.: 7.5 MFD/370 V ENCL: ENCLOSED UL LOGO CSA LOGO THERMALLY PROTECTED	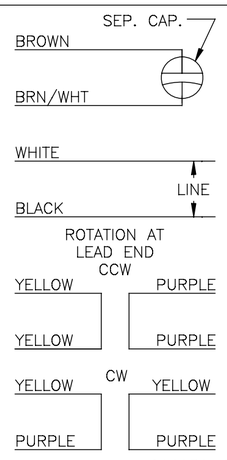

PERFORMANCE CURVE NO.	TORQUE @ 825 RPM (25°C)	APPROVED SAMPLE	UL COMPONENT FILE #	UL COMPONENT CCN #	CSA FILE #	CSA CLASS #
C32477	38.9 OZ. FT.	0540697D	E46412	PRGY2	LR43341	4211-01

GREEN/YELLOW (GROUND)	10.0/11.0 [254/279]	#10 EYELET
PURPLE (REV)	4.0/6.0 [102/152]	.25[6.4] PRE-INSUL. MALE TAB
PURPLE (REV)	4.0/6.0 [102/152]	.25[6.4] PRE-INSUL. FEMALE SPADE
YELLOW (REV)	4.0/6.0 [102/152]	.25[6.4] PRE-INSUL. MALE TAB
YELLOW (REV)	4.0/6.0 [102/152]	.25[6.4] PRE-INSUL. FEMALE SPADE
BROWN	48.0/51.0 [1219/1295]	.25[6.4] FEMALE SPADE
BROWN/WHITE	48.0/51.0 [1219/1295]	.25[6.4] FEMALE SPADE
WHITE	48.0/51.0 [1219/1295]	.50[12.7] SKIN
BLACK	48.0/51.0 [1219/1295]	.50[12.7] SKIN
COLOR	LENGTH	TERMINAL OR STRIP LENGTH

LEAD DATA

REGAL–BELOIT CORPORATION (RBC) PROVIDES TECHNICAL ASSISTANCE TO OUR CUSTOMERS IN SEVERAL AREAS. SINCE RBC DOES NOT RECEIVE ALL DATA CONCERNING THE USE AND APPLICATION OF THE MOTOR, THE SUITABILITY OF THE MOTOR FOR THE APPLICATION MUST BE DETERMINED BY THE CUSTOMER.

DIMENSIONS WITHOUT TOLERANCES ARE FOR REFERENCE ONLY.

MAIN FRAME – OLE	ENCLOSED
END FRAME – OLE	ENCLOSED
MAIN FRAME – LE	ENCLOSED
END FRAME – LE	ENCLOSED

ENCLOSURE

NOTES:
1. 4 EXTRA HEX NUTS 7555A19H01, ON LEAD END, FINGER TIGHT.

CUSTOMER	DISTRIBUTION SERVICE

DRAWING REVISION F	REVISION BY C.ZHOU	DATE 08-27-2015
ECO ECO-0084189	APPROVED BY C.ZHANG	DATE 08-27-2015
ECO DESCRIPTION @ZONE C3 ADD WARNING/CONN LABEL		

COPYRIGHT REGAL BELOIT AMERICA, INC. ALL RIGHTS RESERVED. PROPRIETARY AND CONFIDENTIAL INFORMATION – THIS DOCUMENT IS THE PROPERTY OF REGAL BELOIT AMERICA, INC. ("OWNER") AND CONTAINS OWNER'S PROPRIETARY INFORMATION. ANY PERSON, CORPORATION OR OTHER FIRM RECEIVING IT IS DEEMED, BY RECEIVING IT, TO AGREE THAT IT, AND/OR ANY PART OF IT, SHALL NOT BE DISCLOSED TO ANY PERSON, CORPORATION OR OTHER ENTITY, DUPLICATED, AND/OR USED, EXCEPT AS EXPRESSLY APPROVED IN WRITING IN ADVANCE BY OWNER. THIS DOCUMENT SHALL BE RETURNED TO OWNER UPON REQUEST. IT MAY BE SUBJECT TO CERTAIN RESTRICTIONS UNDER APPLICABLE EXPORT CONTROL LAWS AND REGULATIONS.

DRAWN BY:	AJB
DATE:	07-27-2007
APPROVED BY:	BSHANK
DATE:	03-10-2005
PROCESS/FINISH	–
THIRD ANGLE PROJECTION	

REGAL™ Regal Beloit America, Inc.

DESCRIPTION: MODEL–RFHP–48FR OUTLINE

MATERIAL: –

SIZE	DWG NO	SHEET
C	ORM5488	1